Proxima X

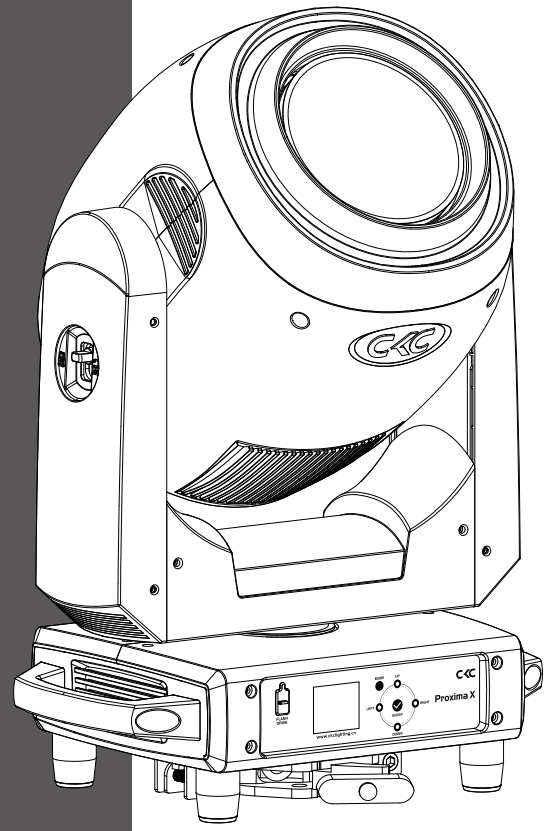

www.ckclighting.com

Before carrying out any installation, maintenance, or cleaning of the lighting fixtures, please confirm that the power has been cut off! Before using this fixture, please read this manual. Our company reserves the right to change product design and specifications without prior notice.

CKC LIGHTING CO.,LTD

Addr.:335 Nansha Avenue, Tung Chung Town,
Nansha District, Guangzhou City, China.
TEL：(020)3920 4506 FAX：(020)3920 4631
WEB：www.ckclighting.com

CONTENTS

1. Security Warning Information 1

2. Product Introduction 3

2.1 Exterior dimensions 3
2.2 Fixture packaging accessories 3

3. Main technical parameters of the equipment 3

4. Packaging and transportation 5

4.1 Disassemble packaging 5
4.2 Equipment installation 5

5. Installation Requirements Explanation 5

5.1 Clamp installation 5
5.2 Fixture installtion 6
5.3 Hanging Installation Diagram 7

6. Power and signal connection 8

6.1 Power and signal socket 8
6.2 Power Connect 8
6.3 Signal Connect 9

7. Control panel 10

7.1 Panel Introduction 10
7.2 System menu 10

8. DMX control channel table 12

9. Control circuit diagram 16

10. Regular maintenance 17

10.1 Cleaning and maintenance 17
10.2 Fault analysis and handling 17

www.ckclighting.com

★ Statement ★

- This manual contains important information on safe use and installation. Please read it carefully and follow the requirements for operation and installation. Please keep this manual properly;
- The equipment has good performance and complete packaging when it leaves the factory. The operator should strictly follow the warning items and operating instructions stated in the manual. Any malfunction or damage caused by misuse or neglect of the manual is not within the scope of our company's responsibility and warranty;
- The relevant information in this manual is for reference only. All lighting products are subject to the actual product. Any changes will not be notified separately, and our company reserves the right of final interpretation.

1. Security Warning Information

Attention !

Please read the safety requirements information in this section carefully before installing, powering on, operating, or repairing the lighting fixtures.

- This product is for professional use and is not suitable for other purposes;
- After receiving the lighting fixtures, please check if the packaging is complete and unpack to check if the equipment has been damaged due to transportation. If there is any damage caused by transportation, please do not use this lamp and contact local technicians or manufacturers as soon as possible;
- When transporting again, please use the original packaging materials;
- If there is obvious damage to the machine casing, it should be replaced in a timely manner;
- When hanging lamps, it is necessary to verify that the hanging equipment can withstand more than 6 times the weight of the lamp. After installation, it is necessary to verify that the lamp cover and installation buckle are secure and undamaged. At the same time, a safety rope should be used as an auxiliary safety for the lamp and fixed on the truss;
- The light source inside this luminaire should be replaced by the manufacturer, its service agent, or a similarly qualified person;
- If you have any other questions about how to safely operate the equipment, please contact our technical personnel or call our service hotline;
- This product has a protection level of IP20 and is suitable for indoor use;
- Avoid direct external strong light shining on the lens, which may cause the lens to focus and burn out internal components.

- Lighting fixtures should be kept clean and avoid prolonged use in overheated or dusty environments to prevent contact with chemical liquids;
- When using the product, attention should be paid to avoiding serious or fatal injuries caused by fire, heat, electrical shock, and ultraviolet radiation. Before powering on or installing, read the instruction manual first. Follow the safety precautions for operation and pay attention to the warning signs on the instructions and equipment;
- Only professionals are allowed to install, operate, and maintain lighting fixtures, and strictly follow the procedures stated in the operating instructions.

- The eyes cannot directly look at the luminous object;
- Do not connect this device to any dimmer;
- If visible damage occurs to the protective casing, lens, and display screen on the lighting fixture, it is considered as damage to the point of loss;
- Please do not place any filters or other items at the light outlet, and do not replace non original parts;
- The minimum safe illumination distance of the lamp is 15m.

- Before installation, please confirm that the power supply voltage used matches the voltage indicated on the light fixture. Each lighting fixture should be properly grounded and electrically installed according to relevant standards;
- Please disconnect the power before repairing or cleaning the equipment;
- During the operation of the lighting fixtures, touching the wires is prohibited to prevent electric shock;
- If the external soft cable or wire of this lamp is damaged, the wire should be replaced by the manufacturer, its agent, or a similarly qualified person to avoid danger;
- Avoid flammable liquids, water, or metal conductors from entering the interior of the lamp to prevent electric shock or fire. If any foreign objects enter the lamp, immediately cut off the power supply;
- When multiple lamps are operated in series, the signal lines can be connected in multiple ways, but the power supply must be connected separately.

- The lighting fixtures work normally at -20 ℃ to 45 ℃ . When replacing any components or accessories in the equipment, ensure that the power is disconnected to prevent electric shock and injury;
- The maximum surface temperature of the lamp during operation can reach 65 ℃ , please do not touch it with bare hands.

- The lighting fixtures must be installed in a sufficiently ventilated area, at least 0.5m away from adjacent surfaces, to ensure that no ventilation holes are blocked;
- Do not install the lighting fixtures directly on flammable objects;
- The minimum distance between all outer surfaces of the lamp and combustible materials is 0.5m.

www.ckclighting.com

2. Product Introduction

2.1 Exterior dimensions of lighting fixtures

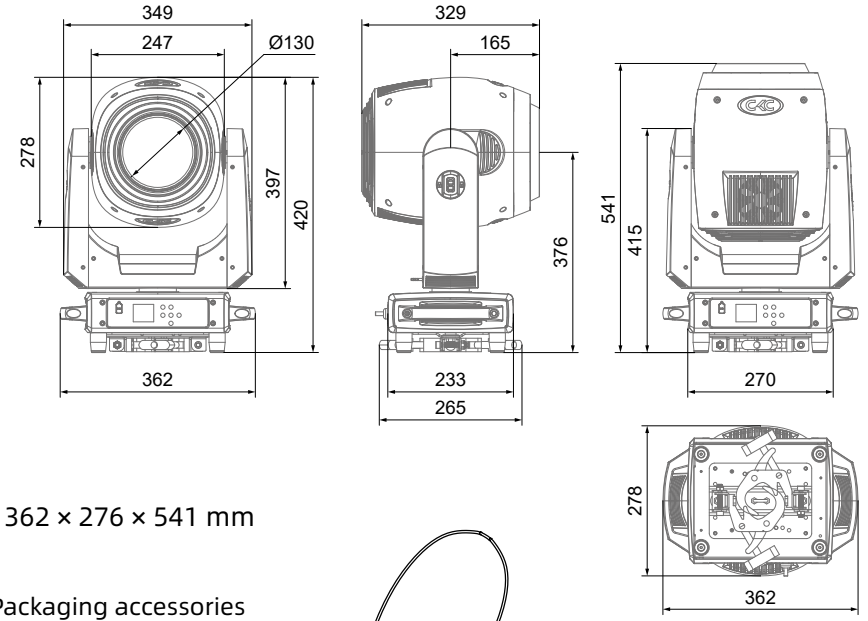

362 × 276 × 541 mm

2.2 Packaging accessories

Name	QTY
Safety cable	1 PCS

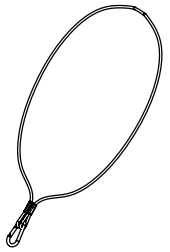

3. Main technical parameters of the equipment

Product execution standards: GB7000.1-2023, GB7000.217-2023, Q/YF-2017

- **Electrical parameter**

  Rated input voltage: AC 100V-240V~ 50Hz/60Hz
  Rated power of the entire fixture: 400W
  Power factor: 0.999F
  Input Current: 1.89A 220V

- **Source lifespan**

  >20000 hours

- **Optical system**

  LED source: 260W Laser
  Beam angel: 1.1°
  Output luminous flux: 9000 Lm

- **Color system**

  CCT: 8000K
  CRI: 70
  Color wheel: 17+1
  CMY

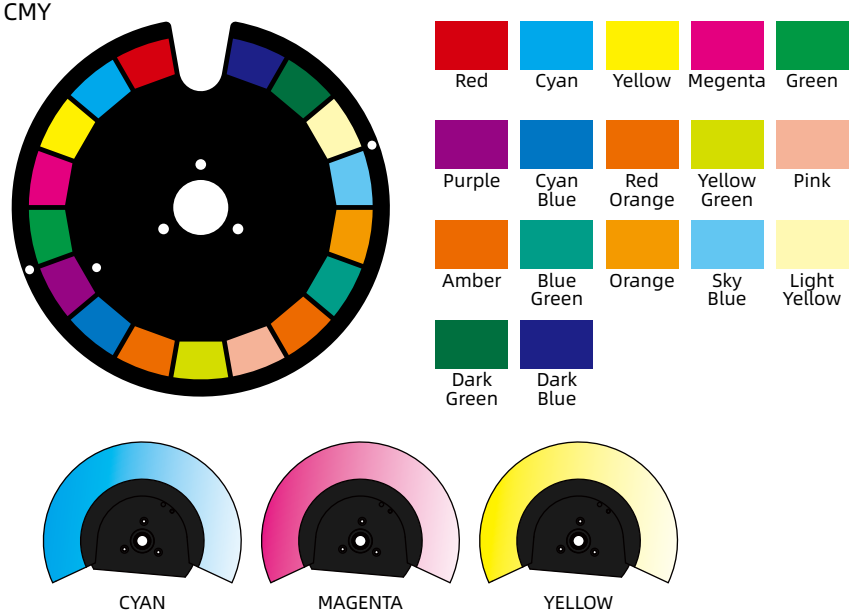

- **Gobo system**

  Fixed gobo: 19 + 1

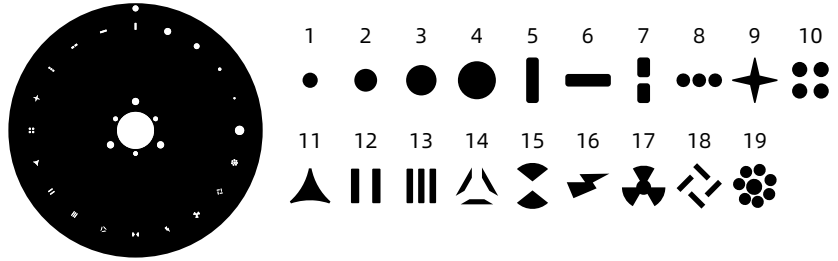

- **Prism system**

  16 prism+ 6 linear

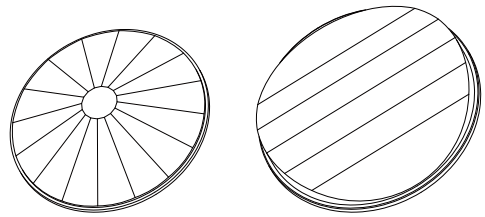

www.ckclighting.com

- **Pan/Tilt**

  Infinite rotation (360°)

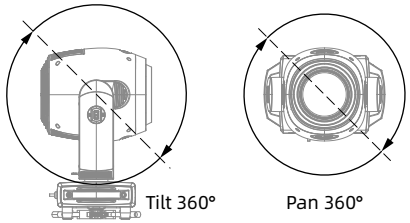

- **Control and programming**

  Control channel：23CH/28CH
  Protocol：DMX512, RDM
  Data connect：3/5 pin signal in/out

- **Illumination draw**

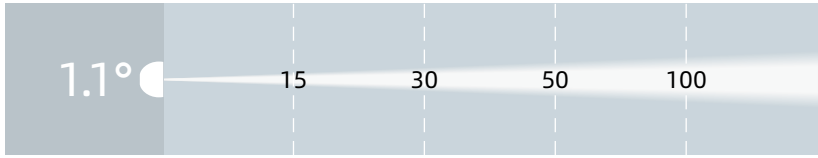

Lux	337000	88500	30752	7688
Distance(m)	0.29	0.58	0.96	1.92

- **Other effect function**

  Fast electronic strobe：1~25Hz　　Frost：Heavy frost

- **Other features and functions**

  Weight：22.2 KG

4. Packaging and transportation

4.1 Disassemble packaging

Notice：After receiving the fixture, please unpack and check for any damage caused by transportation. If there is any damage caused by transportation, please do not use this fixture and contact the local technical personnel or manufacturer as soon as possible.

4.2 Equipment packaging

1). Disconnect the power supply before packaging the lighting fixtures to allow them to cool completely;
2). Flight cases can only be stacked in two layers and are not allowed to be reversed.

5. Installation Requirements Explanation

5.1 Clamp install

The lighting fixtures can be installed on the stage or on any direction of the truss, and the clamp can be quickly and easily locked onto the truss.

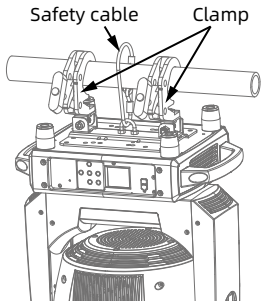

Warning!

The fixture uses an integrated clamp. To use it, lift the clamp up and then rotate it 180° to lock onto the truss. Additionally, a separate safety cable must be connected to the hole on the base. Note: Do not connect the safety cable to the carrying handle.

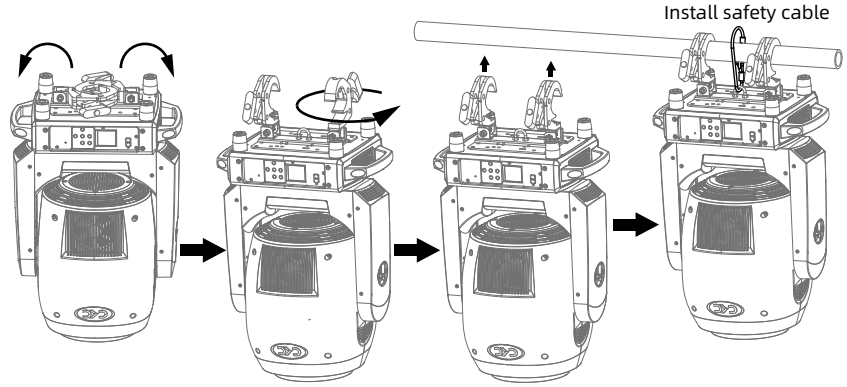

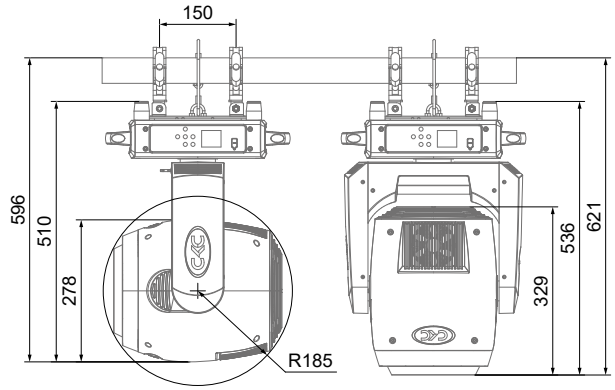

5.2 Equipment installation

Before installation, it is necessary to verify that the lamp hook and safety rope are not damaged, and that the installation object can withstand 6 times the total weight of the lamp and cable accessories;

www.ckclighting.com

5.3 Hanging Installation Diagram

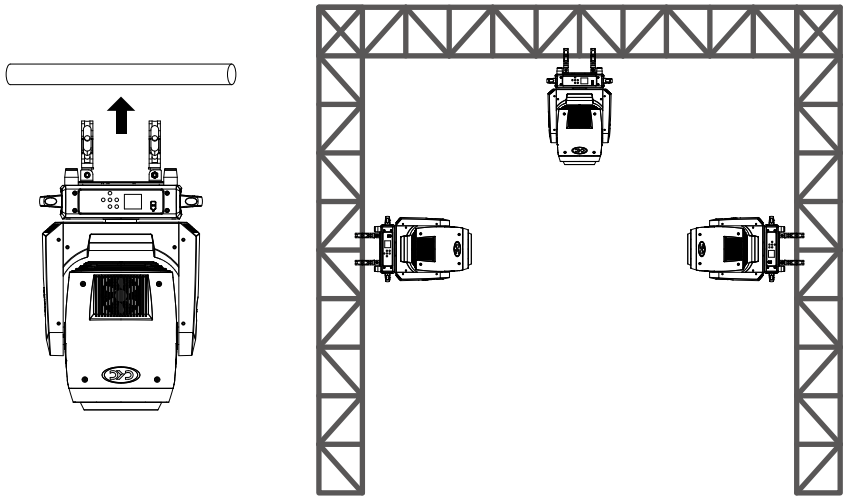

Reminder: External beam source may damage internal lighting fixtures

External beams from direct sunlight, lighting fixtures, and lasers that are directly focused onto the casing or penetrate the lens to illuminate the interior of the fixture may cause damage to the components. This is a common issue with all lighting fixtures and does not occur alone with CKC products. Although there is no way to completely prevent this problem from occurring, following the following guidelines can prevent potential damage.

When unpacking, installing, using, and stopping the operation of the lighting fixtures, please do not expose the transparency of the fixtures the mirror is exposed to direct sunlight, other lighting fixtures, or laser beams,Do not directly focus the beam of this device onto another lighting fixture.

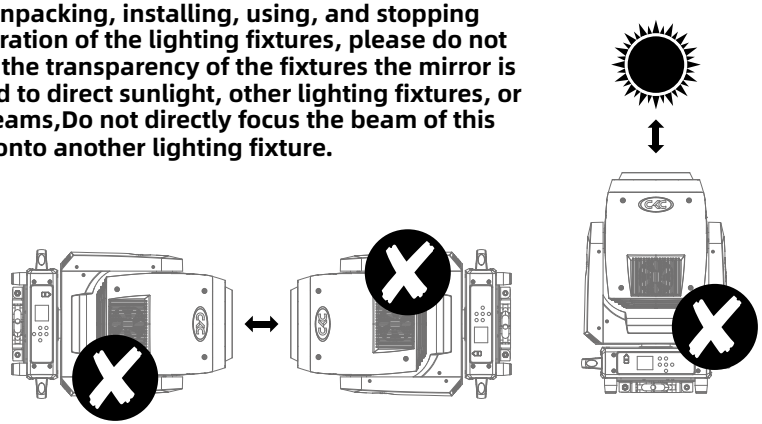

6. Power、Signal connect

6.1 Power and signal socket

1.Fuse holder 2.Power input
3.DMX input 4.DMX output
5.DMX input 6.DMX output

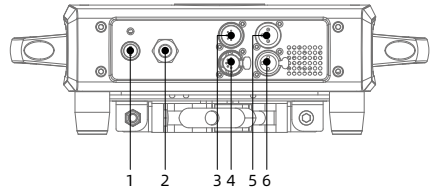

Integrated power cable version

1.Fuse holder 2.Power input
3.Power output 4.DMX input
5.DMX output 6.DMX input
7. DMX output

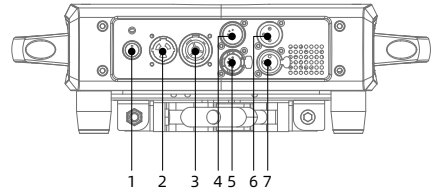

Power socket version

6.2 Power connect

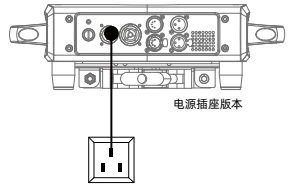

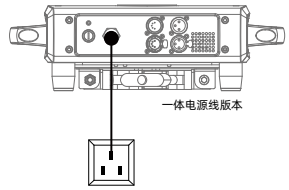

Power In

Connection method:

L(live wire) - brown wire

E(Ground wire) - yellow/green dual color line

N(Zero Line) - Blue Line

When connecting the power supply, please note that the voltage and frequency of the power supply must match the voltage and frequency marked on the light fixture. When multiple fixtures are used simultaneously, it is recommended to connect the power supply of each fixture separately, so that each fixture can be individually controlled for power on/off.

Attention: When connecting the power supply, the ground wire (yellow/green dual color wire) must be safely grounded and comply with all relevant electrical installation standards.

This product uses Powercon In/Out to connect power cords. Due to power limitations, a 2-square 220V power cord can carry up to 6 products.

www.ckclighting.com

Waining !

- Do not connect too many fixtures or overload a single power cord;
- Do not use power cords with damaged insulation layers, and do not place power cords on other wires;
- When the fixture is not in use or cleaned, please unplug the power cord; Do not forcefully unplug or drag the power cord directly.

6.3 Signal connect

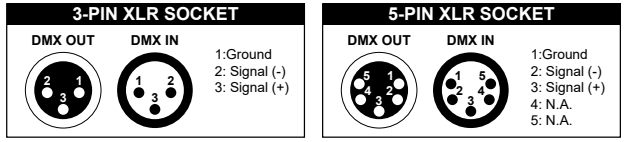

The lighting fixtures are equipped with standard DMX XLR input and output sockets. Please use DMX512 shielded twisted pair signal cables or Category 3/5 or above network twisted pair cables for connection. The typical connection distance for DMX signal lines is 150 meters. When transmitting signals over long distances, a DMX512 signal amplifier must be added.

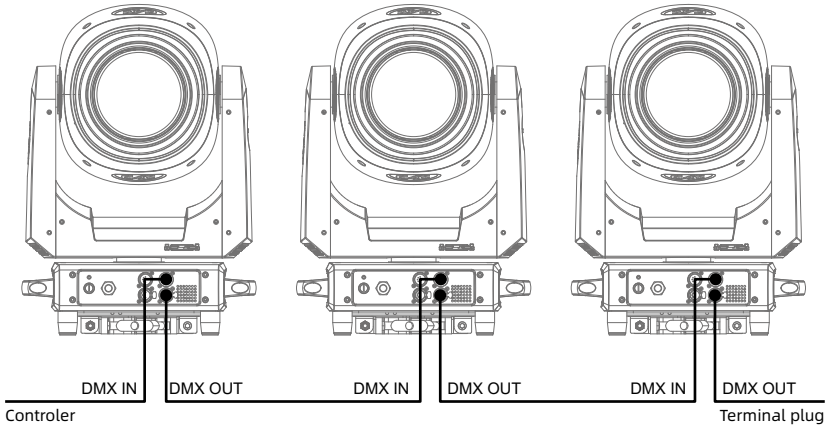

Connect a shielded twisted pair signal cable from the DMX output port of the controller to the DMX input port of the first device, and from the DMX output port of the first device to the DMX input port of the second device, and so on, until all the lamps are connected. Then install a terminal plug on the last 3 pin socket of each connected lamp output. (Weld a 4/1W, 120 Ω resistor between the 2 and 3 pins of a 3 or 5 core pin XLR plug).

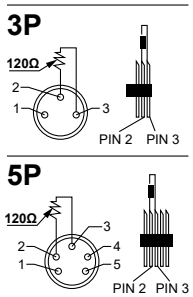

7. Control panel

7.1 Panel Introduction

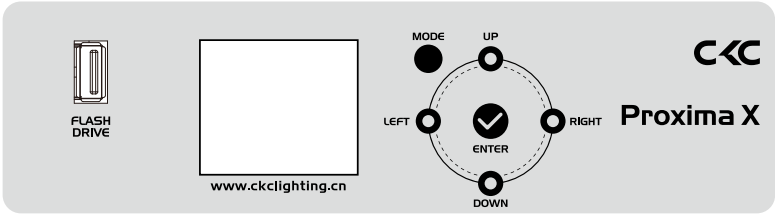

- Adopting a 1.8 "LCD display screen, the operation panel is equipped with a rechargeable battery, which can enter the menu to set address codes and make other settings without powering on;
- Press the MODE key to view or modify the lighting function settings, and press the UP, DOWN, LEFT, and RIGHT keys to select the function menu;
- Press the ENTER key to confirm your selected function menu, which will take you to the corresponding sub menu in the menu. Each menu item represents a specific function of the lighting fixture (as shown in the table below);
- Press the ENTER key to save your modifications or enter a submenu, and press the UP or DOWN key to modify values (increase or decrease values); Press the MODE key to return to the previous menu or exit.
- Press the MODE key to return to the previous menu or exit.

7.2、System menu

Note: The gray color block is the default setting value

Software Update Please Wait CKC Proxima X Motor Reset Please Wait...			
Receive	Set Address	A001-XXX	
User Mode	User Mode	Standard Extend	
	Status	No DMX Mode P.Reverse T.Reverse Pan Degree Feedback Move.Spd Hibernation	Hold/Auto/black ON/OFF ON/OFF 630/540 ON/OFF Speed 1~ 4 OFF, 01M~99M, 15M
	Dim Mode	Standard/Stage/TV/Architectur/Theatre	
	Temp. C/F	Celsius Fahrenheit	

www.ckclighting.com

Function	Dim Curve	LINEAR SQUARE INV-SQUARE S-CURVE	
	Frequency	900Hz/1000Hz/1100Hz/1200Hz/1300Hz/1400Hz/ 1500Hz/2500Hz/4000Hz/5000Hz/10kHz/15kHz/ 20kHz/25kHz	
	Fan Set	Head Fan	Silent Auto High
	LCD.Set	Backlight FlipDisplay Key Lock DispFlash	01~60m <01m> ON/OFF ON/OFF ON/OFF
	Disp.Set	Chan.Value Slave Set Auto.Prog	PAN..... Slave Master / Alone
	DFSE	ON/OFF	
	USB Update	OFF/ON	
	Time.Info	CurrentTime (Hours) Total Time (Hours) Last Time (Hours) Timer PIN (ON/OFF) Clear Last (Password=050) Clear Total (Password=060)	
	Temp. Info	XXX℃	
	Fan Speed	Fan：xxxxRPM	
	Error. Info	NONE/Pan,Tilt.....	
	Model. Info	Proxima X	
	Software.V	1U01 V1.X.X 2U01 V1.X.X 3U01 V1.X.X 4U01 V1.X.X	
Test	Reset.Motor	All Pan&Tilt Head	
	Test.Channel	PAN	
	Panel.Ctrl.	PAN =XXX :	
	Calibrate	-Password- DIM :	

8. DMX channel table:

23CH	28CH	Value	Function
1	1	**PAN Movement 8bit**	
		0-255	Pan Movement By 630/540
2	2	**Pan Fine 16bit**	
		0-255	Fine control of Pan movement
3	3	**TILT Movement 8bit**	
		0-255	Tilt Movement
4	4	**Tilt Fine 16bit**	
		0-255	Fine control of Tilt movement
5	5	**PAN Continuous rotation**	
		0-127	No function
		128-189	Pan clockwise from fast to slow
		190-193	No rotation
		194-255	Pan counter-clockwise from slow to fast
6	6	**TILT Continuous rotation**	
		0-127	No function
		128-189	Titl clockwise from fast to slow
		190-193	No rotation
		194-255	Titl counter-clockwise from slow to fast
7	7	**Dimmer (intensity)**	
		0-255	Intensity 0 to 100%
8	8	**Dimmer Fine**	
		0-255	Intensity 0 to 100%
9	9	**Shutter, strobe**	
		000-031	No function (shutter closed)
		032-063	Open
		064-095	Strobe effect slow to fast
		096-127	Open
		128-159	Pulse-effect slow to fast
		160-191	Open
		192-223	Random strobe slow to fast
		224-255	Open
10	10	**Cyan:**	
		0-255	0 to 100%
	11	**Cyan Fine:**	
		0-255	0 to 100%
11	12	**Magenta:**	
		0-255	0 to 100%
	13	**Magenta Fine:**	
		0-255	0 to 100%
12	14	**Yellow:**	
		0-255	0 to 100%
	15	**Yellow Fine:**	
		0-255	0 to 100%

www.ckclighting.com

13	16	**ColorWheel**	
		000-005	Color 0(open)
		006-009	Color 1
		010-013	Color 2
		014-017	Color 3
		018-021	Color 4
		022-025	Color 5
		026-029	Color 6
		030-033	Color 7
		034-037	Color 8
		038-041	Color 9
		042-045	Color 10
		046-049	Color 11
		050-053	Color 12
		054-057	Color 13
		058-061	Color 14
		062-065	Color 15
		066-069	Color 16
		070-073	Color 17
		074-181	Open → Color1..Color17 → Open
		182-213	Clockwise from fast to slow
		214-223	Stop
		224-255	Counter-clockwise from slow to fast
14	17	**ColorWheel fine**	
		0-255	Color wheel fine:0 - 100%
		Fixed Gobos Wheel	
		0-5	Open
		6-10	FixedGobo 1
		11-15	FixedGobo 2
		16-20	FixedGobo 3
		21-25	FixedGobo 4
		26-30	FixedGobo 5
		31-35	FixedGobo 6
		36-40	FixedGobo 7
		41-45	FixedGobo 8
		46-50	FixedGobo 9
		51-55	FixedGobo 10
		56-60	FixedGobo 11
		61-65	FixedGobo 12
		66-70	FixedGobo 13
		71-75	FixedGobo 14
		76-80	FixedGobo 15
		81-85	FixedGobo 16
		86-90	FixedGobo 17
		91-95	FixedGobo 18

15	18	96-100	FixedGobo 19
		101-105	Open
		106-110	FixedGobo 1 shake, from slow to fast
		111-115	FixedGobo 2 shake, from slow to fast
		116-120	FixedGobo 3 shake, from slow to fast
		121-125	FixedGobo 4 shake, from slow to fast
		126-130	FixedGobo 5 shake, from slow to fast
		131-135	FixedGobo 6 shake, from slow to fast
		136-140	FixedGobo 7 shake, from slow to fast
		141-145	FixedGobo 8 shake, from slow to fast
		146-150	FixedGobo 9 shake, from slow to fast
		151-155	FixedGobo 10 shake, from slow to fast
		156-160	FixedGobo 11 shake, from slow to fast
		161-165	FixedGobo 12 shake, from slow to fast
		166-170	FixedGobo 13 shake, from slow to fast
		171-175	FixedGobo 14 shake, from slow to fast
		176-180	FixedGobo 15 shake, from slow to fast
		181-185	FixedGobo 16 shake, from slow to fast
		186-190	FixedGobo 17 shake, from slow to fast
		191-195	FixedGobo 18 shake, from slow to fast
		196-200	FixedGobo 19 shake, from slow to fast
		201-222	Clockwise from fast to slow
		223-232	Stop
		233-255	Counter-clockwise from slow to fast
16	19	**Liner Prism1:**	
		0-5	Open
		6-255	6 Liner prism
17	20	**Rotating prism1 index:**	
		0-5	Open
		6-128	Prism1 indexing
		129-191	Forwards prism1 rotation from fast to slow
		192-192	No rotation
		193-255	Backwards prism1 rotation from slow to fast
18	21	**Prism2:**	
		0-5	Open
		6-255	16 Facet prism
19	22	**Rotating prism2 index:**	
		0-5	Open
		6-128	Prism2 indexing
		129-191	Forwards prism2 rotation from fast to slow
		192-192	No rotation
		193-255	Backwards prism2 rotation from slow to fast
20	23	**Focus**	
		0-255	Continuous adjustment from far to near

www.ckclighting.com

	24	**Focus Fine**	
		0-255	Continuous adjustment from far to near
21	25	**Frost:**	
		0-255	Frost:0 - 100%(Linear)
22	26	**Dim Modes**	
		000-020	Standard
		021-040	Stage
		041-060	TV
		061-080	Architectural
		081-100	Theatre
		101-255	Default to Unit Setting
	27	**Speed pan/tilt movement**	
		0-255	Max to min speed
23	28	**Function Device Set:**	
		00-05	No function
		06-17	Invert Pan off
		18-29	Invert Pan on
		30-41	Invert Tilt off
		42-53	Invert Tilt on
		54-61	Fan Auto
		62-69	Fan Silent
		70-77	Fan High
		78-89	Linear
		90-101	SQUARE
		102-113	INV-SQUARE
		114-125	S-Curve
		126-131	900hz
		132-137	1000hz
		138-143	1100hz
		144-149	1200hz
		150-155	1300hz
		156-161	1400hz
		162-167	1500hz
		168-173	2500hz
		174-179	4000hz
		180-185	5000hz
		186-191	10khz
		192-197	15khz
		198-203	20khz
		204-209	25khz
		210-221	P/T Reset
		222-233	Head Reset
		234-255	All Reset

9. Control circuit diagram

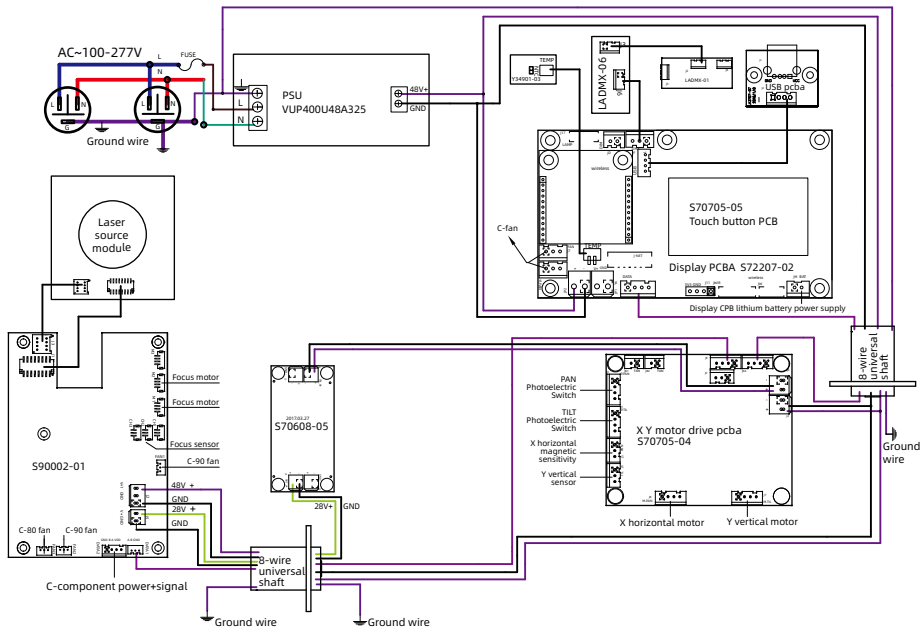

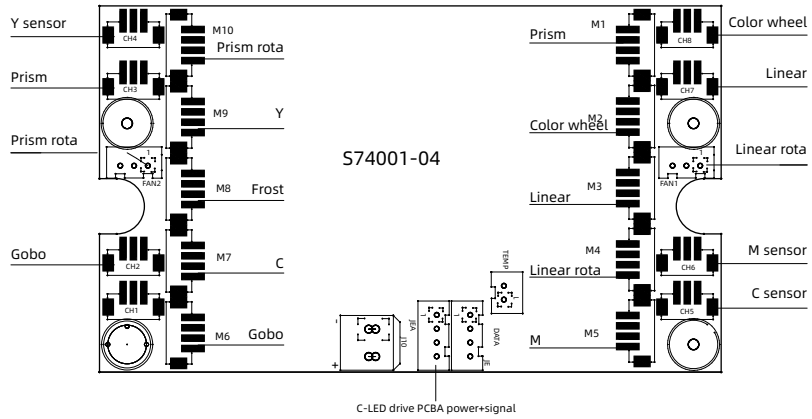

www.ckclighting.com

10. Regular maintenance

10.1 Cleaning and maintenance

Lighting fixtures require daily cleaning and maintenance, and their service life largely depends on the operating environment and standards. If you have any questions, please consult our technical engineers for advice. Maintenance and repair work not included in this book should be entrusted to our qualified technical engineers.

Attention! Damage caused by dust, e-liquid, or other reasons, as well as abnormal use, is not covered by the warranty.

Waining !

Before opening any lid, disconnect the power supply. Cleaning optical components requires gentle wiping as the coating surface is prone to scratching. Do not use damaging liquids or hard objects , as they may damage the plastic or coating surface.

- When the lens is cracked or otherwise damaged, it should be replaced in a timely manner;
- When the brightness significantly decreases, the LED may have reached its expiration date and should be replaced in a timely manner;
- When the fixture cannot start, please check if the fixture power fuse is blown. If it is blown, a fuse of the same specification must be used for installation;
- The fixture is equipped with a temperature protection device. When the temperature is too high, the protection device will automatically reduce power.
- When this situation occurs, please check whether the fan is running normally, whether the fan and fan mesh are clogged with dust, identify the fault and repair it before starting the fixture. Please note that only qualified technicians are allowed to carry out maintenance work;
- To maintain smooth movement of the focusing lens, it is recommended to lubricate the guide rail of the focusing lens every three months. Excellent and high-temperature resistant lubricating grease should be used, and excessive grease should not be used as it can easily dirty adjacent components.

10.2 Fault analysis and handling

Fault description	Analysis	Processing method
No action after power on	Check if the power switch is turned on	Turn on
	Check if the fuse is blown	Replace
	Check if the output of PSU is normal	Detecting voltage
	Check if poor contact in the internal circuit	Reconnect
Uncontrolled lighting fixtures	Check if the DMX signal cable is connected correctly (If there is no signal, the display screen will flash)	Reconnect or replace
	Check if the address code is correct and if the DMX mode of the lighting fixture matches the settings	Reconfirm
	The main control PCB is damaged	Replace
Not bright	Source aging or damage	Replace
	Power PCB malfunction	Check/ Replace
	Loose or poor contact of the circuit	Reconnect
	PSU malfunction	Replace
Automatically turn off or dim the lights	Source aging	Replace
	Damaged cooling fan or abnormal wind speed	Replace
	Check the power output of the fan	Check/ Replace
	The temperature control switch is damaged	Replace
Gobo wheel misalignment or abnormal control	Poor contact of motor wire	Reconnect
	Corresponding motor drive board malfunction	Refixed
	Misalignment or magnetic damage between the magnetic tube and the positioning magnet	Adjust/Replace
	Motor malfunction	Replace
Weak light efficiency and uneven light spot	Source aging	Replace
	Source not centered with the lens	Adjust Source
	The optical mirror has accumulated dust or stains	Clean
	The optical mirror is damaged	Replace
Impure color	Weakening of light efficiency	Replace Source PCB
	The color filter has accumulated dust or stains	Clean
	The color filter has been demolded or damaged	Replace
Gobo is unclear	The optical mirror has accumulated dust or stains	Clean
	The optical mirror is damaged	Replace

www.ckclighting.com
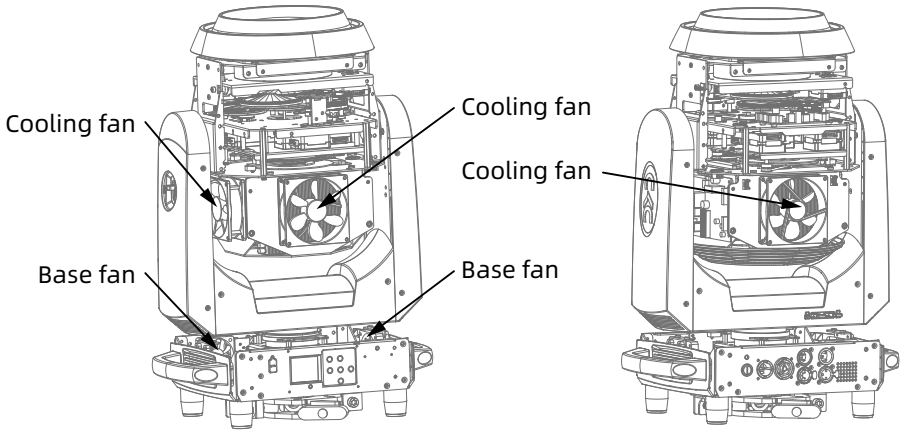
Head or base fan stops rotating	Check if the fan leads are installed properly or disconnected	Re connect
	Check if the fan is damaged	Replace
	Check if there are any other interfering objects within the operating range of the fan	Adjust
Attention! The above analysis is for abnormal reference only. Non professionals are not allowed to disassemble and repair the machine